document id: 0000 524.050 001 00 A / state: 230 - released
view date: 2024-02-28 16:04:37 / user: ANGELESM

KZch	Stck
EAC	
EAE	
EAF	
EGA	
EN	
EPD	
EPB	
EPA	1
EPD	
EPR	
ERB	1
ERE	1
ERD	
ERX	
ERB	
ERE	
ERS	
ERS	
FLV	
FQS	
FWA	
FWB	
FWQ	
FWS	
FWT	
KE	2
KEL	1
KKR	1
DFA	
DFD	
DFE	
SAF	
SAP	1
SFD	
SFR1	
SFR2	
SFR3	
SFR4	
SFR5	
DWF	
DQS	
SWA1	
SWA2	
SWB	
SWE1	
SWE2	
SWW	
VEA	1
VEZ1	
VEZ4	
VEZ5	
VEZ7	
VEZ8	
VEZ10	
VEZ11	
VEZ13	
VEZ15	
VIH	1
VIP	1
VIT	
WMK	
WMW	

Teil 1

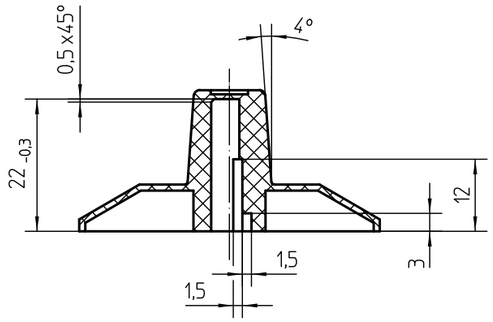

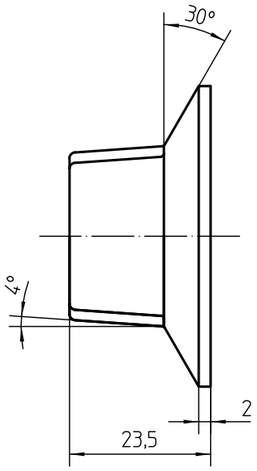

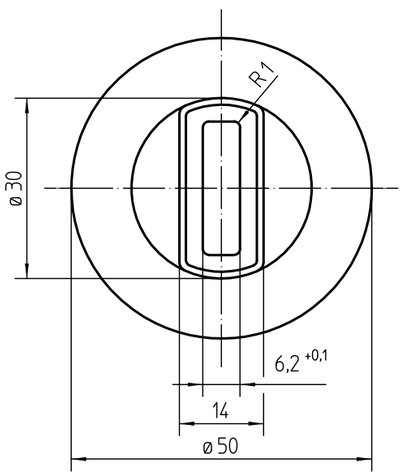

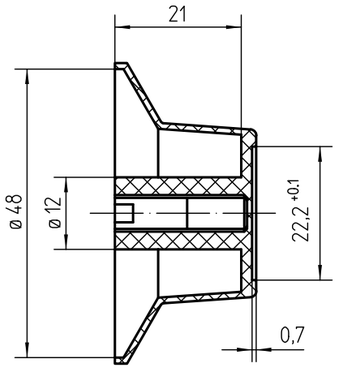

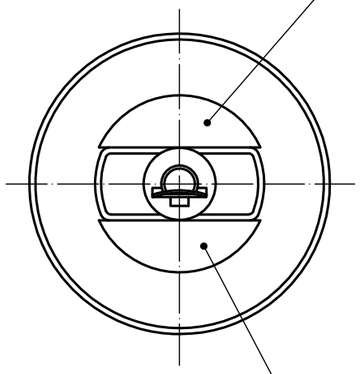

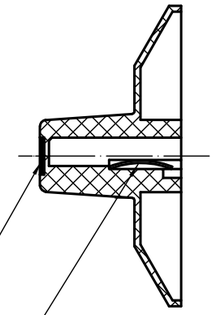

Nestnummer und Kunststoff-kennzeichnung >PA6< hier angebracht.

1 2 3

Z 2:1

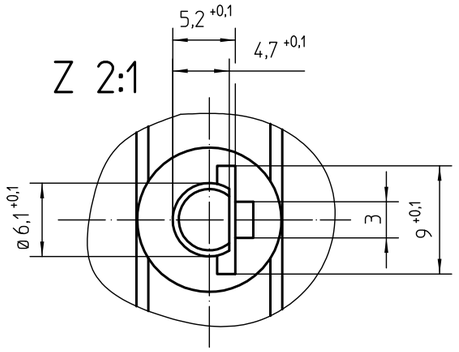

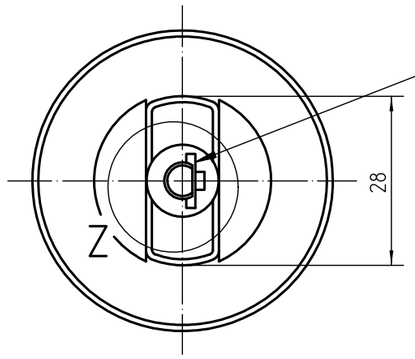

Innenprofil kann im Werkzeug um 90°, 180° und 270° gedreht werden.

Farbe: Graphitschwarz, RAL 9011
Werkstoff: PA6
Freimaßtoleranz: DIN 16901-130
Oberfläche: DIN 4761 - P3u

Teil 2

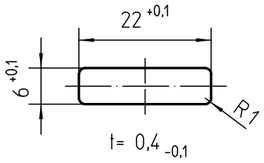

matt, geschliffen

Werkstoff: Al
Freimaßtoleranz: ISO 2768-m

Teil 3

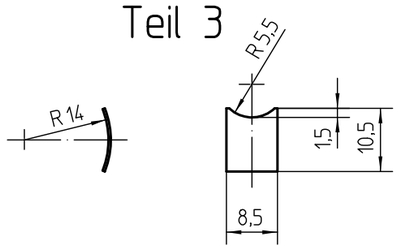

t= 0,4

Werkstoff: Federstahl
Freimaßtoleranz: ISO 2768-m

alle Kanten gebrochen

.	.	.	This document is exclusively committed to you for the agreed purpose. Any kind of duplication, utilization or communication of its content is prohibited, if not expressly conceded otherwise. Violators are committed to pay compensations. Any claims of existing or future property rights remain unaffected.		
2	CD0001	2010-12-15	CAD	Date	Name
1	ER6465	1995-04-28	Create.	1995-04-27	HOTZ
Cha.	Information No.	Date	Proc.	1995-04-27	HOTZ
F.Rel.	.	.	Rel.	1995-04-28	Sixt

Blank No. . EN Mat.No. .
Material .
Surface Texture ISO 1302
General Tolerances .
Scale Unit .
Scale .

Designation
Knebel
.
.

E·G·O

Drawing No.	Sh.No.	Ver.	Stat.	Sheets	Doc.	Ex.Doc.
0000 524.050	001	0	F	.	.	.

Origin . Repl.for Zchg.v.18.01.83 Repl.by . Reference .